LM1110 20" MANHOLE ASSEMBLY

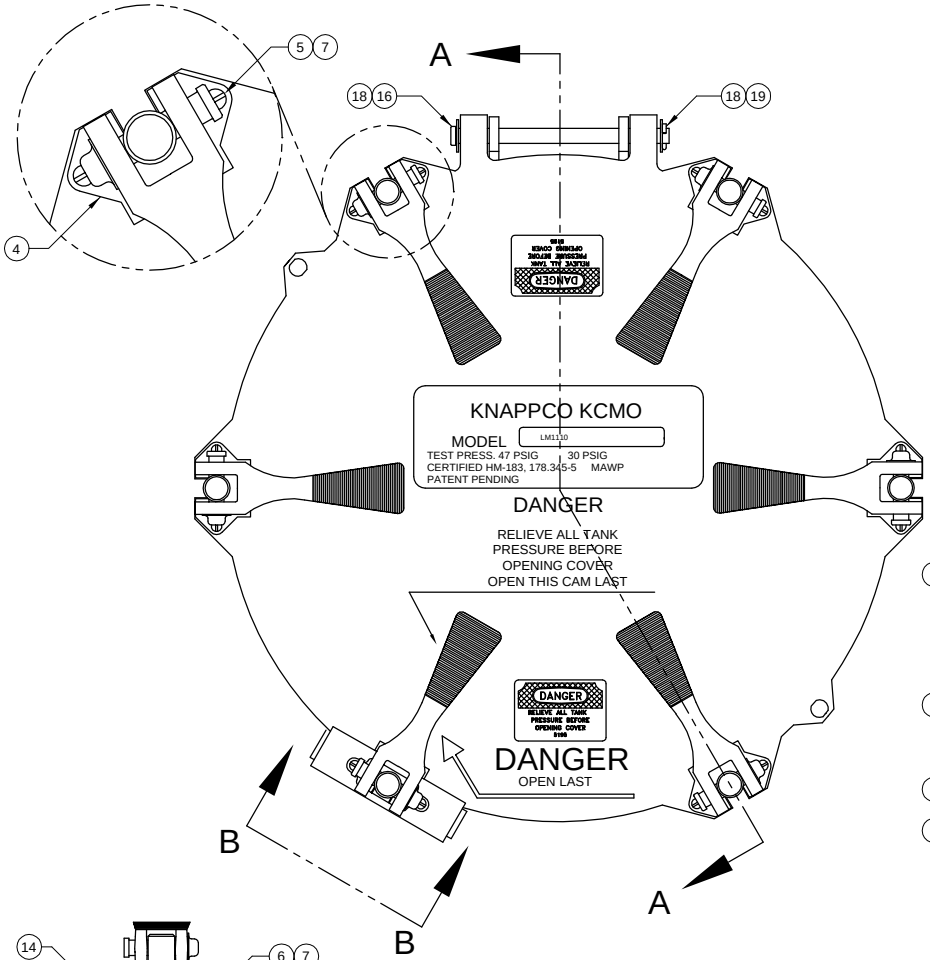

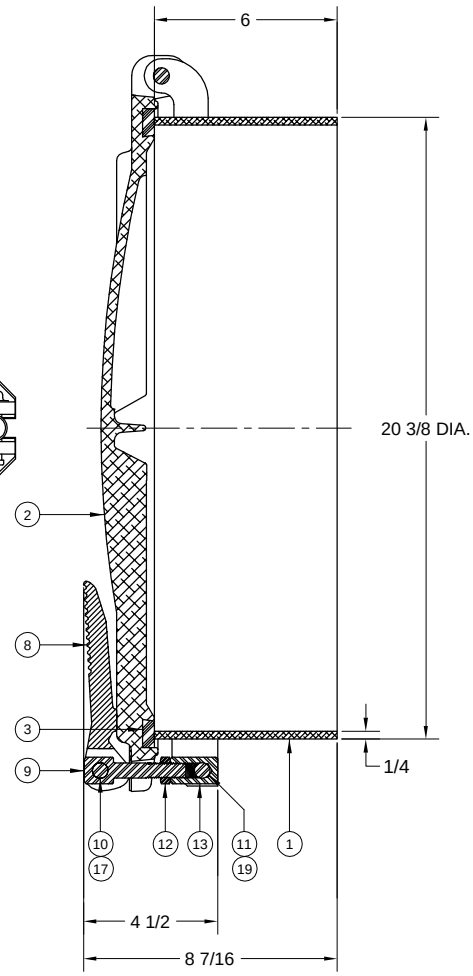

SECTION A-A

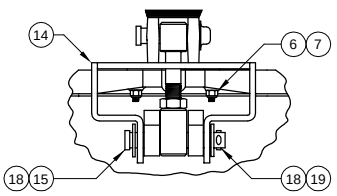

VIEW B-B

ITEM	PART NUMBER	DESCRIPTION	QTY.
1	3467	WELD RING ASSY (ALUM.)	1
2	3539	COVER (ALUM.)	1
3	3395	GASKET (BUNA)	1
4	2592	WEAR PLATE (S.S.)	6
5	3546	SCREW (S.S.)	10
6	3545	SCREW (S.S.)	2
7	3544	LOCK NUT (S.S.)	12
8	3949	CAM LEVER (PLATED) [1]	6
9	3439	STUD (PLATED) [1]	6
10	3952	CLEVIS PIN (PLATED) [1]	6
11	5677	CLEVIS PIN (PLATED)	5
12	1016	JAM NUT (PLATED) [1]	6
13	1012	CONNECTOR (PLATED) [1]	6
14	3686	SAFETY CATCH (PLATED)	1

ITEM	PART NUMBER	DESCRIPTION	QTY.
15	3953	CLEVIS PIN (PLATED) [1]	1
16	3955	CLEVIS PIN (PLATED)	1
17	1020	PAL NUT (PLATED) [1]	6
18	1043	WASHER (PLATED)	4
19	1045	COTTER PIN (PLATED) [1]	7

ALTERNATE SEALING MEDIA / CAM ASSEMBLIES

PART NUMBER	DESCRIPTION
3523	GASKET (WHITE NEOPRENE)
4244	GASKET (VITON)
4862	GASKET (SILICONE)
3519	CAM ASSEMBLY KIT (PLATED)
4111	CAM ASSEMBLY (S.S.)

1 - Included in 3519